4.3 Dimensions of MP 400 compact flowmeter or separate inductive wafer flow sensor DN 10 – DN 150 installed in piping with standard assembly accessory (Fig. 15)

DN	PN	A	B	C	D	E	F	G	Tightening studs	
10	25	68	75	105	188	–	–	60	M12 x 135	4 pcs
20	25	68	75	105	268	60	60	40	M12 x 135	4 pcs
32	25	96	100	140	500	160	160	42	M16 x 175	4 pcs
40	25	96	110	145	510	200	120	47	M16 x 175	4 pcs
50	25	104	125	160	520	210	110	48	M16 x 200	4 pcs
80	25	159	160	200	920	400	250	55,5	M16 x 245	8 pcs
100	25	158	190	230	968	440	240	65	M20 x 265	8 pcs
150	25	194	250	300	1550	750	450	78	M24 x 300	8 pcs
150	16	194	240	285	1510	750	450	58	M20 x 300	8 pcs

Fig.15

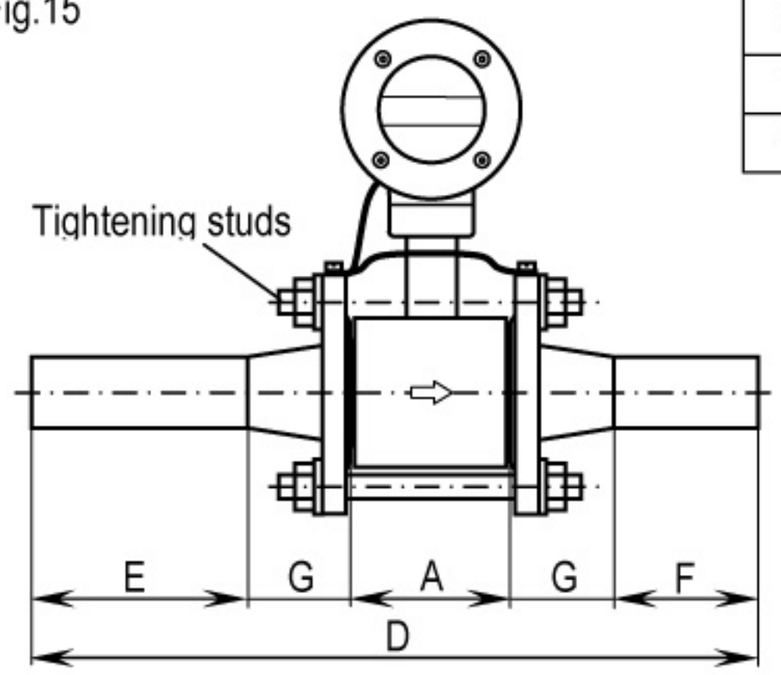

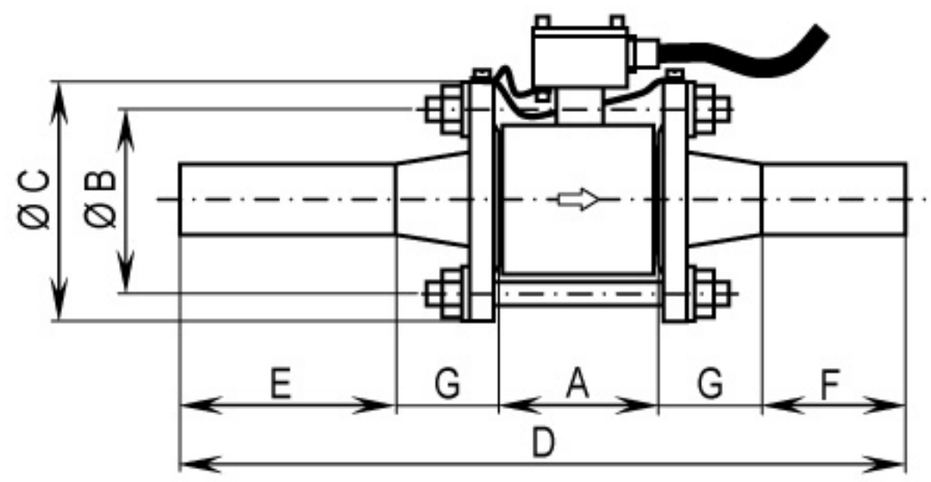

4.4 Dimensions and weight of flow sensor with flanges DN 10 – DN 800 (Fig. 16)

Dimensions and weight of flowmeter or flow sensor with DIN flanges are in the table below. Other flanges (ANSI, GOST, CSN) and/or other nominal pressure specify in your order. Other flow sensor length A can be specified in inevitable situations.

Fig. 16 a)

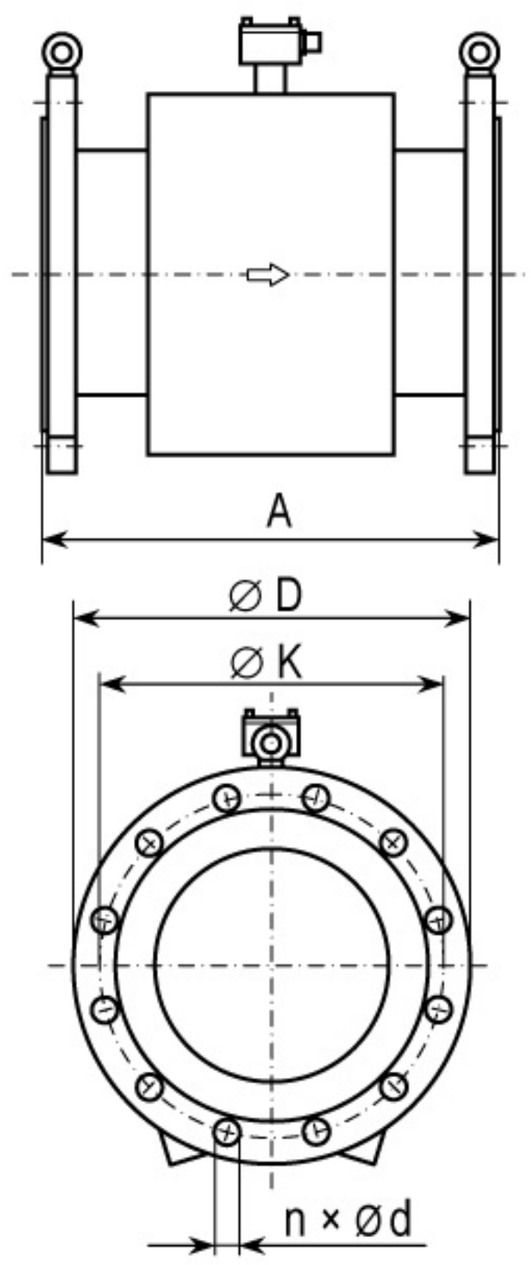

b)

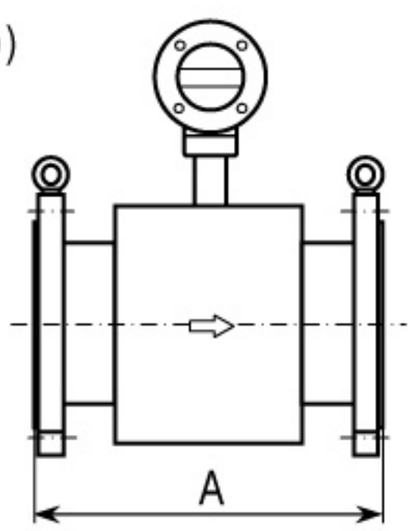

DN	PN	A	Ø D	Ø K	n	Ø d	Weight
10	10, 16, 25	150	90	60	4	14	4.5 kg
20	10, 16, 25	150	105	75	4	14	6.5 kg
25	10, 16, 25	150	115	85	4	14	6.5 kg
32	10, 16, 25	150	140	100	4	18	7 kg
40	10, 16, 25	150	150	110	4	18	7 kg
50	10, 16, 25	200	165	125	4	18	8.5 kg
65	10, 16, 25	200	180	145	4	18	12 kg
80	10, 16, 25	200	200	160	8	18	12.5 kg
100	10 , 16	250	235	190	8	18	14 kg
	25	250	235	190	8	22	14 kg
125	10,16	250	250	210	8	18	19 kg
	25	250	270	220	8	26	22 kg
150	10 , 16	300	285	240	8	22	23 kg
	25	300	300	250	8	26	27 kg
200	10	350	340	295	8	22	39 kg
	16	350	340	295	12	22	39 kg
250	10	400	395	350	12	22	50 kg
	16	400	405	355	12	26	55 kg
300	10	500	445	400	12	22	68 kg
	16	500	460	410	12	26	73 kg
350	10	500	505	460	16	22	140 kg
	16	500	520	470	16	26	150 kg
400	10	600	565	515	16	26	185 kg
	16	600	580	525	16	30	200 kg
500	10	600	670	620	20	26	255 kg
	16	600	715	650	20	33	290 kg
600	10	600	780	725	20	30	360 kg
	16	600	840	770	20	36	420 kg
800	10	800	1015	950	24	33	600 kg
	16	800	1025	950	24	39	610 kg